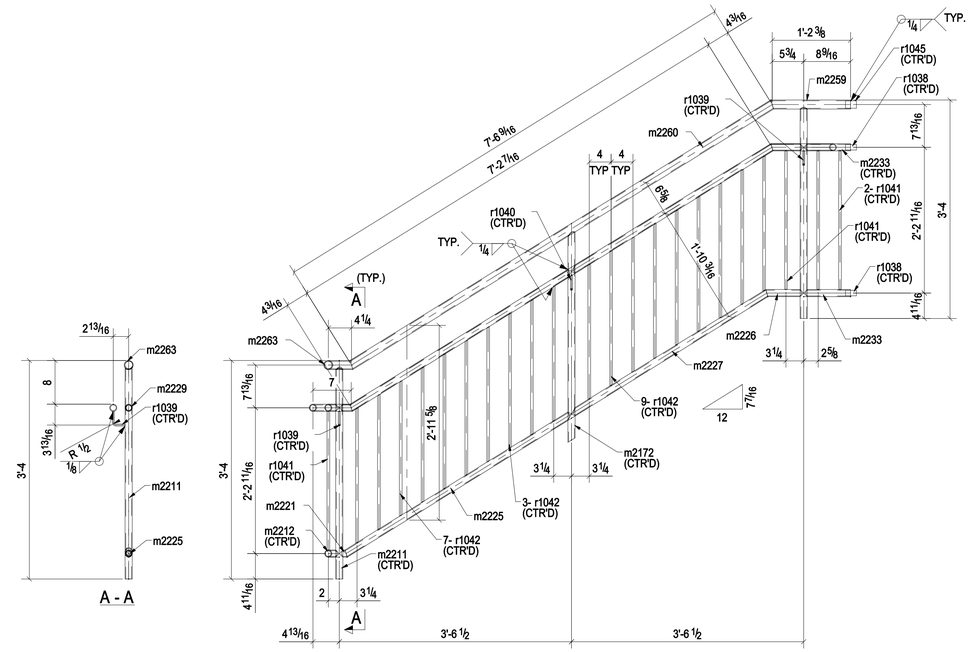

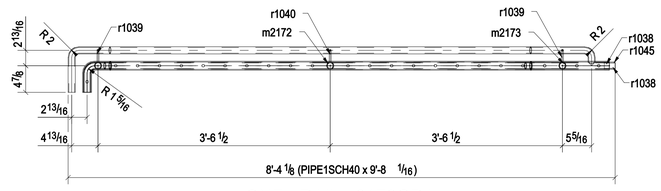

ONE - RAIL - 01F8GR1

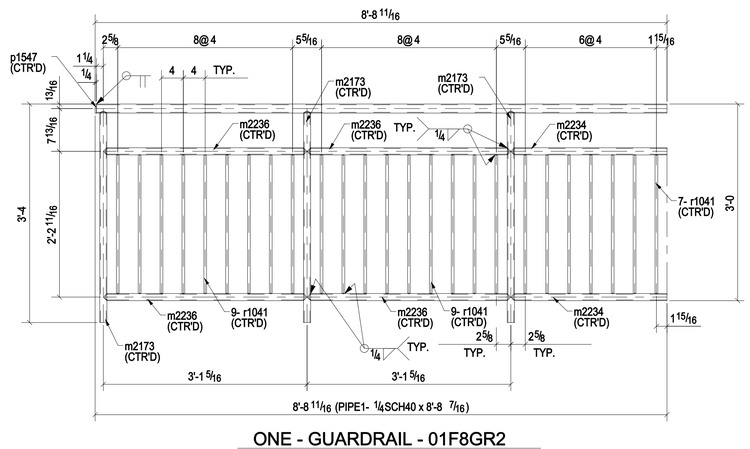

ONE - GUARDRAIL - 01F8GR2

BILL OF MATERIAL

Place Mark	Qty Tot	Description	Length	Weight Total	Remarks	Steel Grade
01F8GR1	ONE	RAIL		110		
01F8GR1	1	PIPE1SCH40	9'-8 1/16"			A53
m2172	1	PIPE1SCH40	3'-2 5/8"			A53
m2173	1	PIPE1SCH40	3'-2 11/16"			A53
m2211	1	PIPE1SCH40	3'-2 7/8"			A53
m2212	1	PIPE1SCH40	0'-5 3/16"			A53
m2214	1	PIPE1SCH40	0'-5 1/4"			A53
m2221	1	PIPE1SCH40	0'-1 7/16"			A53
m2225	1	PIPE1SCH40	4'-0 11/16"			A53
m2226	1	PIPE1SCH40	0'-6 15/16"			A53
m2227	1	PIPE1SCH40	3'-6 1/4"			A53
m2229	1	PIPE1SCH40	0'-2 3/8"			A53
m2230	1	PIPE1SCH40	3'-11 5/8"			A53
m2231	1	PIPE1SCH40	0'-6"			A53
m2232	1	PIPE1SCH40	3'-7 5/16"			A53
m2233	2	PIPE1SCH40	0'-8 9/16"			A53
m2259	1	PIPE1-1/4SCH40	1'-2 9/16"			A53
m2260	1	PIPE1-1/4SCH40	7'-7 1/16"			A53
m2263	1	PIPE1-1/4SCH40	0'-7 1/2"			A53
r1038	2	ROD1*	0'-2"			A36
r1039	2	ROD3/8"	0'-4 1/8"			A36
r1040	1	ROD3/8"	0'-4 1/4"			A36
r1041	4	ROD1/2"	2'-1 3/8"			A36
r1042	19	ROD1/2"	2'-0 7/8"			A36
r1045	1	ROD1 3/8"	0'-2"			A36
01F8GR2	ONE	GUARDRAIL		92		
01F8GR2	1	PIPE1-1/4SCH40	8'-8 7/16"			A53
m2173	3	PIPE1SCH40	3'-2 11/16"			A53
m2234	2	PIPE1SCH40	2'-4 9/16"			A53
m2236	4	PIPE1SCH40	3'-1 5/16"			A53
p1547	1	PL1/4"X1 11/16"	0'-1 11/16"			A36
r1041	25	ROD1/2"	2'-1 3/8"			A36

ROUTE THIS SHEET TO QA/QC UPON RELEASE TO SHIP

INI: DATE:

SHOP DRAWING DISCLAIMER

ALL INFORMATION PROVIDED ON THESE DRAWINGS ARE PREPARED IN ACCORDANCE TO THE CONTRACT DOCUMENTS AND THE SPECIFICATIONS. ALL CLOSED AREAS SHOWN ARE DUE TO LACK OF INFORMATION PROVIDED BY THE CONTRACT DOCUMENTS OR SPECIFICATIONS, BUT PREPARED WITH ALL THE INFORMATION AVAILABLE TO US. WE MUST HAVE THESE AREAS ANSWERED BY THE GENERAL CONTRACTOR, ARCHITECT, & ENGINEER, BEFORE WE CAN START FABRICATING ANY MATERIAL. PLEASE RESPOND WITH THIS INFORMATION BY MARKING UP OUR SHOP DRAWINGS.

CHANGES PER RFI#

REFERENCE CONTRACT SHEETS

WELDS: E70XX
HOLES: 13/16"Ø HOLES UNO.
STEEL: ASTM A992 UNO.

STANDARD SHOP NOTES

1. EA. END OF MA'TL. MAY DEVIATE FROM DIM'S SHOWN BY 1/2 NORMAL A6 MILL TOLERANCE FOR LENGTH AND SQUARENESS U.N.O.
2. WELDERS ARE TO USE FCAW AND/OR SMAW PROCESS PER AWS D1.1 UNLESS NOTED.
3. ALL MEMBERS TO BE FABRICATED WITH SHIPPING MARKS ON LEFT HAND END.
4. ALL SHOP BOLTS TO BE A-325 U.N.O.
5. RUNNING DIM A ARE GIVEN FROM END OF MAIN MATERIAL(i.e. BOTT./COL. & END OF BEAM)
6. 13/16"x1" SLOTS @ OSL OF CLIP ANGLES U.N.O.

THIS DRAWING IS RELEASED FOR

FABRICATION
ITEM NO. 01

NO.	REVISION DESCRIPTION	DATE:
0	FOR FABRICATION	08/21/14

DESCRIPTION: POST

JOB:
LOC:
MADE:
CONTR:

ITEM: ITEM NO. 01
SHEET: 2A
DATE: 08/21/14
FINISH: SHOP PRIMER
PAGE: 1673

01F8

DRAWN BY: RKB